SFT0007

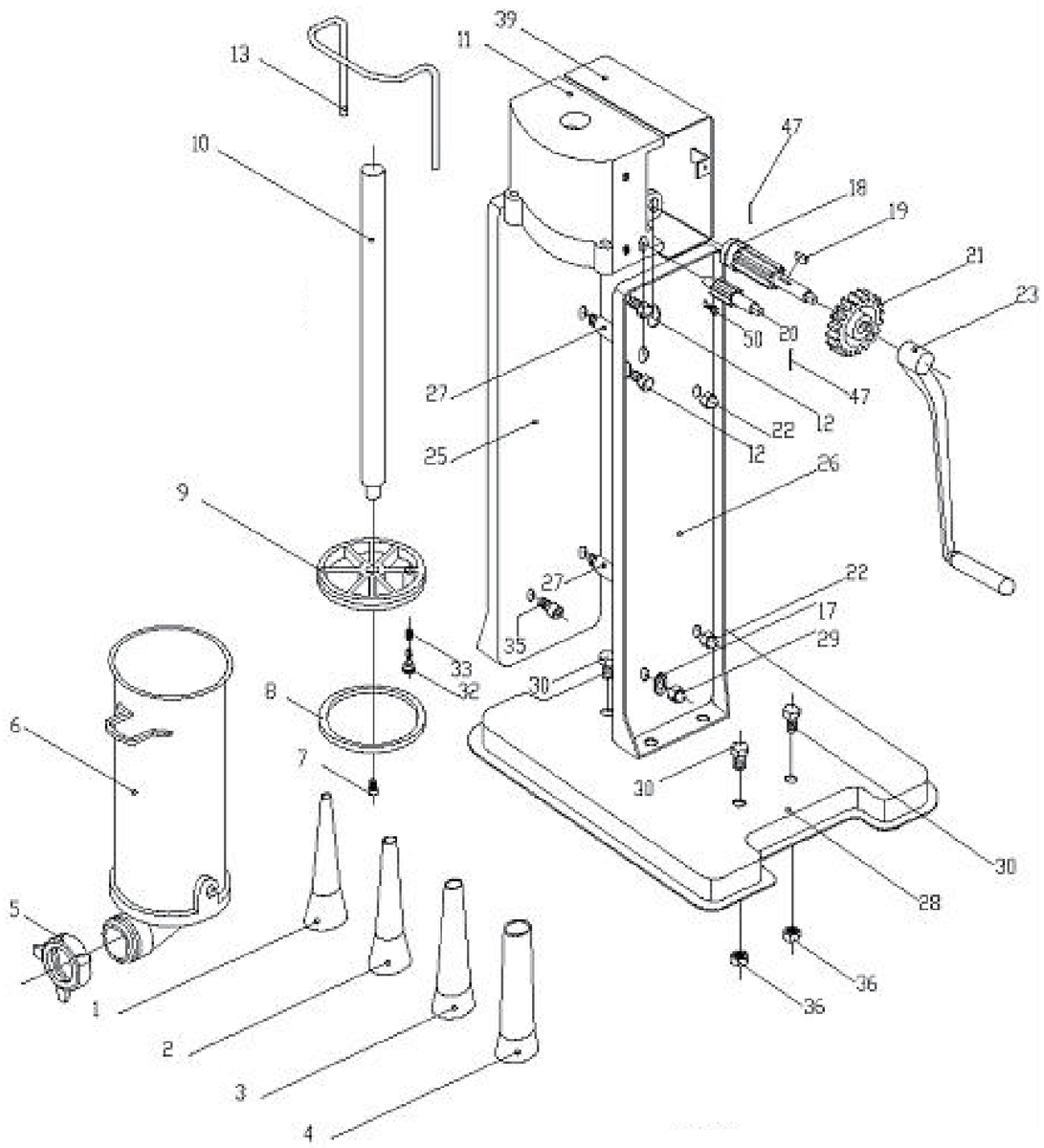

SFT0007

STOCK CODE	DESCRIPTION	MAN.PART NUMBER	DRAWING REF
XSFT9005	S/FILLER TRES [ALL]-FUNNEL LOCK NUT	20546	5
XSFT7006	S/FILLER TRES [7l]-VERTICAL BARREL	21703	6
XSFT5007	S/FILLER TRES [5l]-PISTON SCREW	21010	7
XSFT7008	S/FILLER TRES [7l/10l]-PIST RUBBER RING	21017	8
XSFT7010	S/FILLER TRES [7l]-PISTON SHAFT	20707	10
XSFT7011	S/FILLER TRES [7l/10l]-GEAR CASING	21065/B	11
XSFT7013	S/FILLER TRES [7l]-GEAR CASING HANDLE	21033	13
XSFT7018	S/FILLER TRES [7l]-DRIVE GEAR SHAFT	21023/B	18
XSFT7019	S/FILLER TRES [7l]-GEAR STUD	21025	19
XSFT7020	S/FILLER TRES [7l]-PINION GEAR SHAFT	21022	20
XSFT7021	S/FILLER TRES [7l]-DRIVE GEAR	21024/B	21
XSFT9023	S/FILLER TRES [7l/10l/15l]-HANDLE	21001	23
XSFT3029	S/FILLER TRES [3&5l]-PLASTIC AIR VALVE	20629	32
XSFT9001	S/FILLER TRES [ALL]-SPRING FOR AIR VALVE	25026	33
XSFT7009	S/FILLER TRES [7l/10l]-PIST&RUBBER RING	21008	8 + 9